MODEL: 213325-1-WH
213331-1-WH
213337-1-WH

SPECIFICATION SHEET

Ceramic Utility Sink

Ceramic utility sink top without overflow (standard)
Uses cUPC approved 3-1/2” kitchen sink drain (not included)

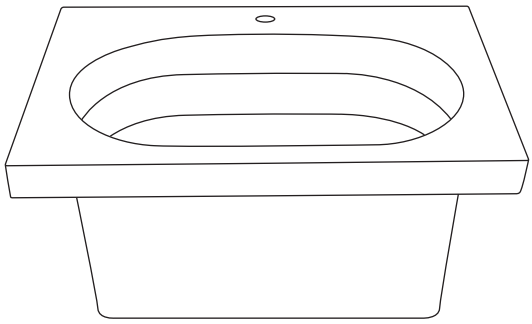

Codes/Standards Applicable
Specified model meets or exceeds the following:
- ASME A112.19.2
- IAPMO/cUPC®
- CSA B45
- CMR 248

Available Colors:
WHITE WH

Faucet:
SINGLE FAUCET HOLE

31” Ashland Ceramic Utility Sinktop fits the following 30” vanitites:

ARDEN
BRIELLA
HAMPTON
JUNO
PORTLAND
SHAKER
SHOJI
SOPHIE

TOP VIEW

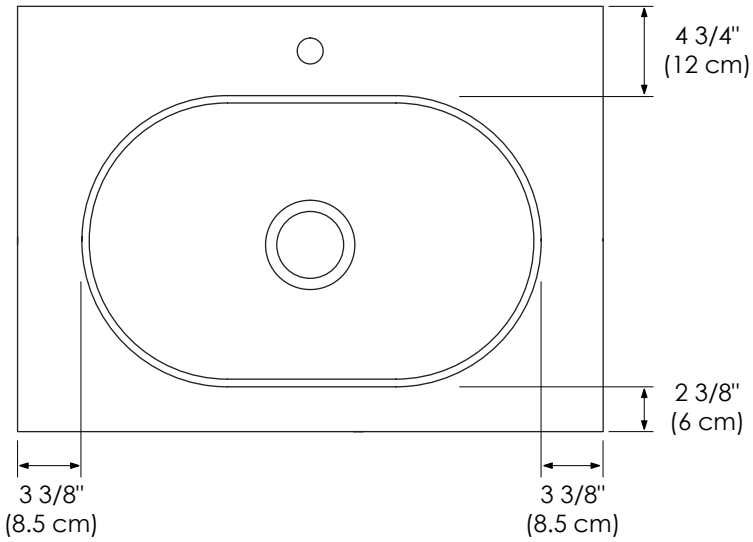

SIDE VIEW

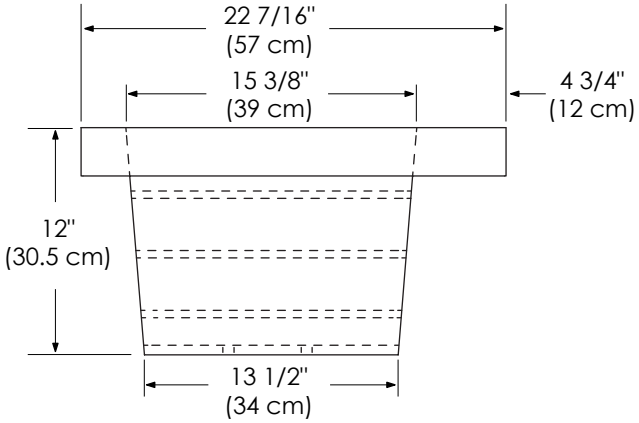

FRONT VIEW

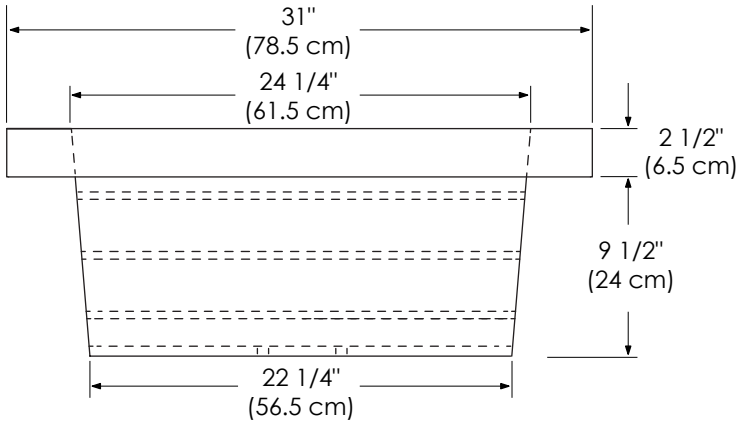

By IAPMO, ceramic lavatory warpage is defective only if warpage of flat slab out of horizontal plane exceeds 6.3 mm/m (0.25 in/ft) on all sizes OR warpage on back of lavatories that are attached to the wall exceeds 3 mm (0.13 in).